GÜRCAN®

CC SERİSİ
CC SERIES

STANDART ODA SOĞUTUCULARI
STANDARD UNIT AIR COOLERS

ABS

7

www.cancold.com.tr

ISO 9001 CE ISO UDEM

CANCOLD®

CC 400 SERİSİ / SERIES

STANDART ODA SOĞUTUCULARI
STANDARD UNIT AIR COOLERS

TEK FANLI / ONE FANS

CC Unit Coolers

1/2" Cooper Tube - Surface Corrugated Aluminium Fins.

Kalıp Geometrisi / Mould Geometry	40 x 35
Bakır Boru / Copper Tube	1/2"
Gövde / Body	STATİK BOYALI STATIC PAINTED

KOD/CODE			CC 400 P	CC 401 P	CC 402 P	CC 403 P	CC 404 P
MODEL			30.1.3X10	30.1.4X10	35.1.4X12	35.1.6X12	40.1.6X14
WATT	DT1=10K	SC1	1747	3043	5240	6365	9478
	DT1=8K	SC2	999	1792	3226	3983	5679
FAN BİLGİLERİ FAN DATA	HAVA DEBİSİ/AIR FLOW RATE	m3/h	1250	1165	2100	1800	2820
	HAVA GÜCÜ/AIR PROJECTION	M	12	12	15	15	20
	FAN ADETİ VE ÇAPI / FAN NUMBER AND DIAMETER	mm	1X300	1X300	1X350	1X350	1X400
	TOPLAM GÜÇ / NO X POWER	W	1X75	1X75	1X140	1X140	1X180
	TOPLAM SES / TOTAL NOISE	db	72	72	64	64	73
	AMPER GÜCÜ / AMPERE POWER	A	0.33	0.33	0.6	0.6	0.39
	FAN DEVRİ / FAN SPEED	min	1390r	1390r	1400r	1400r	1380r
BATARYA BATTERY	YÜZEY ALANI / SURFACE AREA	m2	8,12	10,82	14,94	22,41	36,37
	BORU HACMİ / PIPE VOLUME	lt	1,4	1,9	2,6	3,9	6,1
	LAMEL ARALIĞI / FIN PITCH	mm	4	4	4	4	4
	DEVRELEME / CIRCUIT	pcs	3	2	2	3	6
BOYUTLAR DIMENSION	GİRİŞ / INLET	mm	12	12	12	12	12
	ÇIKIŞ / OUTLET	mm	28	22	22	28	35
	A	mm	760	760	820	820	1000
	B	mm	470	470	550	550	630
	C	mm	300	300	300	350	400
	D	mm	345	345	345	395	445
	E	mm	400	400	460	460	640
	F	mm	180	180	180	180	180
AĞIRLIK WEIGHT	NET	kg	24	26	31	37	51
	GROSS	kg	35	37	45	53	74
ISITICI DEFROST WATT	BATARYA / BATTERY	D1	3X500	3X500	3X500	3X500	4X600
	BATARYA / BATTERY	D2					
	TAVA / TRAY						

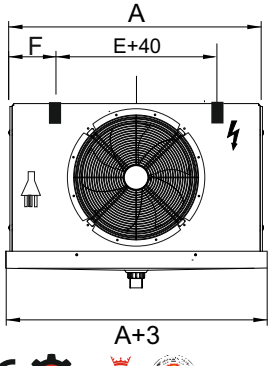

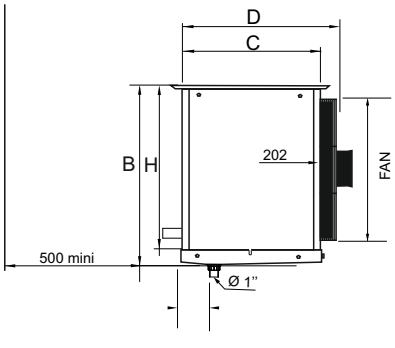

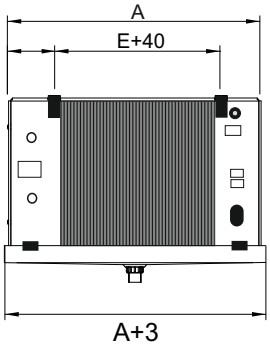

www.cancold.com.tr

CC 400 SERİSİ / SERIES

CANCOLD®

STANDART ODA SOĞUTUCULARI
STANDARD UNIT AIR COOLERS

İKİ FANLI / TWO FANS

CC Unit Coolers

1/2" Cooper Tube - Surface Corrugated Aluminium Fins.

Kalıp Geometrisi / Mould Geometry	40 x 35
Bakır Boru / Copper Tube	1/2"
Gövde / Body	STATİK BOYALI STATIC PAINTED

KOD/CODE			CC 405 P	CC 406 P	CC 407 P	CC 408 P	CC 409 P
MODEL			30.2.4X10	30.2.6X10	35.2.5X12	35.2.6X12	40.2.5X14
WATT	DT1=10K	SC1	5878	8187	12455	12395	18097
	DT1=8K	SC2	4220	5185	7825	8363	12024
FAN BİLGİLERİ FAN DATA	HAVA DEBİSİ/AIR FLOW RATE	m3/h	2387	2050	4100	3655	6000
	HAVA GÜCÜ/AIR PROJECTION	M	12	12	15	15	20
	FAN ADETİ VE ÇAPI / FAN NUMBER AND DIAMETER	mm	2X300	2X300	2X350	2X350	2X400
	TOPLAM GÜÇ / NO X POWER	W	1X75	1X75	1X140	1X140	1X180
	TOPLAM SES / TOTAL NOISE	db	72	72	64	64	73
	AMPER GÜCÜ / AMPERE POWER	A	0.33	0.33	0.6	0.6	0.39
	FAN DEVRİ / FAN SPEED	min	1390r	1390r	1400r	1400r	1380r
BATARYA BATTERY	YÜZEY ALANI / SURFACE AREA	m2	21,65	32,47	36,53	43,84	56,83
	BORU HACMİ / PIPE VOLUME	lt	3,6	5,4	6,1	7,3	9,5
	LAMEL ARALIĞI / FIN PITCH	mm	4	4	4	4	4
	DEVRELEME / CIRCUIT	pcs	3	4	4	6	7
BOYUTLAR DIMENSION	GİRİŞ / INLET	mm	12	12	12	12	12
	ÇIKIŞ / OUTLET	mm	28	28	28	35	35
	A	mm	1200	1200	1300	1300	1600
	B	mm	470	470	550	550	630
	C	mm	300	350	350	350	400
	D	mm	345	395	395	395	445
	E	mm	800	800	900	900	1200
	F	mm	200	200	200	200	200
AĞIRLIK WEIGHT	NET	kg	41	49	56	60	77
	GROSS	kg	59	70	81	87	110
ISITICI DEFROST WATT	BATARYA / BATTERY	D1	4X600	4X700	3X900	3X900	4X1000
	BATARYA / BATTERY	D2					
	TAVA / TRAY						

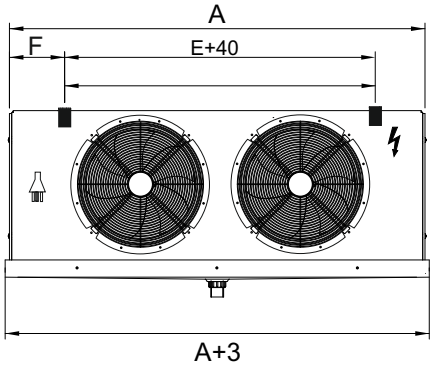

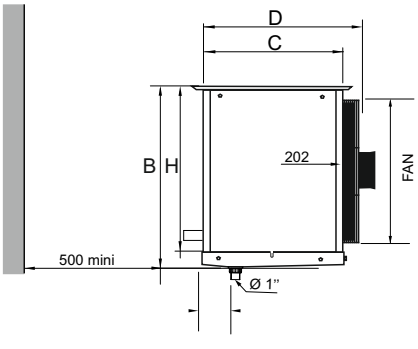

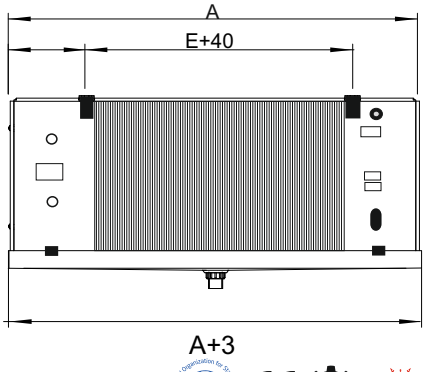

www.cancold.com.tr

CANCOLD®

CC 400 SERİSİ / SERIES

STANDART ODA SOĞUTUCULARI
STANDARD UNIT AIR COOLERS

ÜÇ FANLI / THREE FANS

CC Unit Coolers

1/2" Cooper Tube - Surface Corrugated Aluminium Fins.

Kalıp Geometrisi / Mould Geometry	40 x 35
Bakır Boru / Copper Tube	1/2"
Gövde / Body	STATİK BOYALI STATIC PAINTED

KOD/CODE		MODEL	CC 410 P	CC 411 P	CC 412 P	CC 413 P	CC 414 P
MODEL		KOD/CODE	30.3.3x10	30.3.4x10	35.3.4x12	35.3.6x12	40.3.6x14
WATT	DT1=10K	SC1	8382	9992	15235	17458	27298
	DT1=8K	SC2	5256	6303	10091	12608	16360
FAN BİLGİLERİ FAN DATA	HAVA DEBİSİ/AIR FLOW	m3/h	3750	3495	6440	5400	8460
	RATE HAVA GÜCÜ/AIR PROJECTION	M	12	12	15	15	20
	FAN ADETİ VE ÇAPI / FAN NUMBER AND DIAMETER	mm	3x300	3x300	3x350	3x350	3x350
	TOPLAM GÜÇ / NO X POWER	W	1x75	1x75	1x140	1x140	1x180
	TOPLAM SES / TOTAL NOISE	db	72	72	64	64	73
	AMPER GÜCÜ / AMPER POWER	A	0,33	0,33	0,6	0,6	0,39
	FAN DEVRİ / FAN SPEED	min	1390r	1390r	1400r	1400r	1380r
BATARYA BATTERY	YÜZEY ALANI / SURFACE AREA	m²	24,36	32,47	43,52	65,27	82,97
	BORU HACMİ / PIPE VOLUME	lt	4,1	5,4	7,3	10,9	13,9
	LAMEL ARALIĞI / FIN PITCH	mm	4	4	4	4	4
	DEVRELEME / CIRCUIT	pcs	3	4	6	6	14
	GİRİŞ / INLET	mm	12	12	12	16	16
	ÇIKIŞ / OUTLET	mm	28	28	35	35	54
BOYUTLAR DIMENSION	A	mm	1600	1600	1740	1740	18600
	B	mm	470	470	550	550	630
	C	mm	300	350	300	300	350
	D	mm	345	395	345	395	395
	E	mm	1760	2000	2000	2000	2400
	F	mm	200	200	200	200	200
AĞIRLIK WEIGHT	NET	kg	57	69	80	105	127
	GROSS	kg	82	100	115	152	183
ISITICI DEFROST WATT	BATARYA / BATTERY	D1	4x1000	4x1200	4x1200	4x1400	4x1400
	BATARYA / BATTERY	D2					
	TAVA / TRAY						

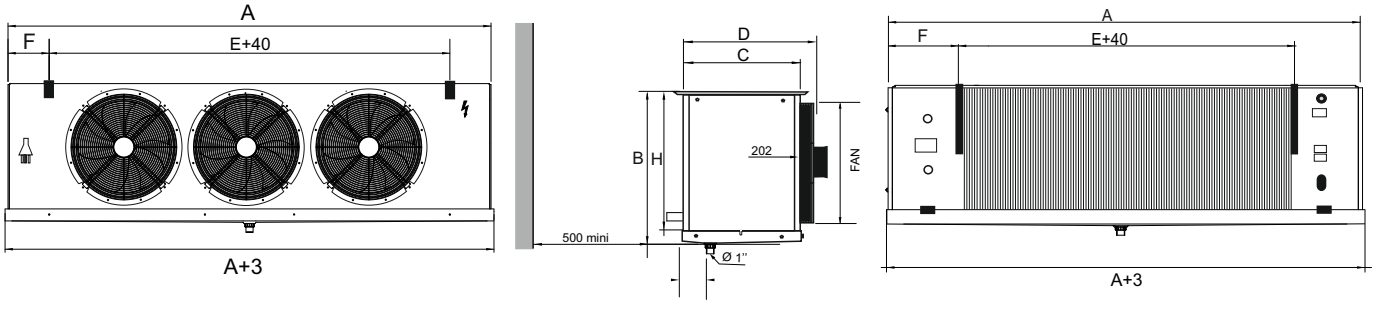

www.cancold.com.tr

CANCOLD®

CC 600 SERİSİ / SERIES

STANDART ODA SOĞUTUCULARI
STANDARD UNIT AIR COOLERS

TEK FANLI / ONE FANS

CC Unit Coolers

1/2" Cooper Tube - Surface Corrugated Aluminium Fins.

Kalıp Geometrisi / Mould Geometry	40 x 35
Bakır Boru / Copper Tube	1/2"
Gövde / Body	STATİK BOYALI STATIC PAINTED

KOD/CODE				CC 600 P	CC 601 P	CC 602 P	GC 603 P	CC 604 P	CC 605 P	CC 606 P
MODEL				30.1.4X10	30.1.6X10	35.1.4X12	35.1.6X12	40.1.5X14	45.1.6X14	50.1.6X16
WATT	DT1=10K		SC1	2399	3321	4225	5373	7241	8580	11665
	DT1=8K		SC2	1541	2023	2694	3416	4053	5579	7456
FAN BİLGİLERİ FAN DATA	HAVA DEBİSİ/AIR FLOW RATE		m3/h	1250	1017	2300	1980	3225	3133	4356
	HAVA GÜCÜ/AIR PROJECTION		M	12	12	15	15	20	25	30
	FAN ADETİ VE ÇAPI / FAN NUMBER AND DIAMETER		mm	1X300	1X300	1X350	1X350	1X400	1X450	1X500
	TOPLAM GÜÇ / NO X POWER		W	1X75	1X75	1X140	1X140	1X180	1X250	1X450
	TOPLAM SES / TOTAL NOISE		db	72	72	64	64	73	73	72
	AMPER GÜCÜ / AMPERE POWER		A	0.33	0.33	0.6	0.6	0.39	0.6	0.9
	FAN DEVRİ / FAN SPEED		min	1390r	1390r	1400r	1400r	1380r	1380r	1300r
BATARYA BATTERY	YÜZEY ALANI / SURFACE AREA		m2	7,43	11,14	10,25	15,38	20,80	24,96	32,10
	BORU HACMİ / PIPE VOLUME		lt	1,8	2,7	2,5	3,7	5,1	6,1	7,8
	LAMEL ARALIĞI / FIN PITCH		mm	6	6	6	6	6	6	6
	DEVRELEME / CIRCUIT		pcs	2	2	2	3	5	5	6
BOYUTLAR DIMENSION	GİRİŞ / INLET		mm	12	12	12	12	12	12	12
	ÇIKIŞ / OUTLET		mm	19	19	19	28	35	35	35
	A		mm	760	760	820	820	1000	1000	1080
	B		mm	470	470	550	550	630	630	710
	C		mm	300	350	300	350	350	400	400
	D		mm	345	395	345	395	395	445	445
	E		mm	400	400	460	460	640	640	720
	F		mm	180	180	180	180	180	180	180
AĞIRLIK WEIGHT	NET		kg	25	29	30	34	42	49	57
	GROSS		kg	35	41	43	49	60	70	83
ISITICI DEFROST WATT	BATARYA / BATTERY		D1	3X500	3X500	3X500	3X500	4X600	4X600	4X700
	BATARYA / BATTERY		D2							
	TAVA / TRAY									

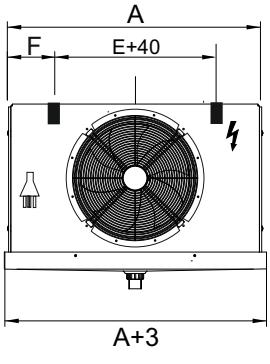

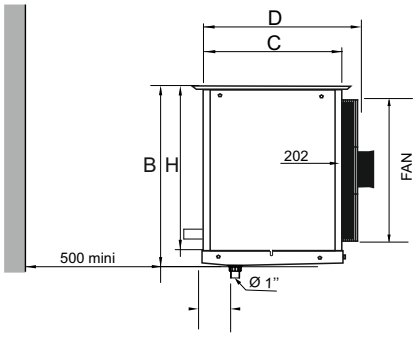

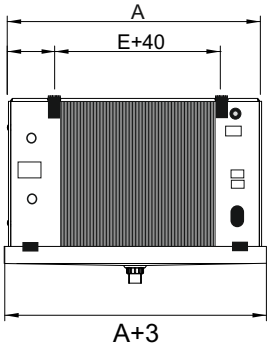

www.cancold.com.tr

CC 600 SERİSİ / SERIES

CANCOLD®

STANDART ODA SOĞUTUCULARI
STANDARD UNIT AIR COOLERS

TEK FANLI / ONE FANS

CC Unit Coolers

1/2" Cooper Tube - Surface Corrugated Aluminium Fins.

Kalıp Geometrisi / Mould Geometry	40 x 35
Bakır Boru / Copper Tube	1/2"
Gövde / Body	STATİK BOYALI STATIC PAINTED

KOD/CODE			CC 600 N	CC 601 N	CC 602 N	CC 603 N	CC 604 N	CC 605 N	CC 606 N
MODEL			30.1.4X10	30.1.6X10	35.1.4X12	35.1.6X12	40.1.5X14	45.1.6X14	50.1.6X16
WATT	DT1=7K	SC3	1200	1300	2105	2613	3030	3745	5593
	DT1=6K	SC4	973	1051	1698	2098	2242	2658	4568
FAN BİLGİLERİ FAN DATA	HAVA DEBİSİ/AIR FLOW RATE	m3/h	1250	1017	2300	1980	3225	3133	4356
	HAVA GÜCÜ/AIR PROJECTION	M	12	12	15	15	20	25	30
	FAN ADETİ VE ÇAPI / FAN NUMBER AND DIAMETER	mm	1X300	1X300	1X350	1X350	1X400	1X450	1X500
	TOPLAM GÜÇ / NO X POWER	W	1X75	1X75	1X140	1X140	1X180	1X250	1X450
	TOPLAM SES / TOTAL NOISE	db	72	72	64	64	73	73	72
	AMPER GÜCÜ / AMPERE POWER	A	0.33	0.33	0.6	0.6	0.39	0.6	0.9
	FAN DEVRİ / FAN SPEED	min	1390r	1390r	1400r	1400r	1380r	1380r	1300r
BATARYA BATTERY	YÜZEY ALANI / SURFACE AREA	m2	7,43	11,14	10,25	15,38	20,80	24,96	32,10
	BORU HACMİ / PIPE VOLUME	lt	1,8	2,7	2,5	3,7	5,1	6,1	7,8
	LAMEL ARALIĞI / FIN PITCH	mm	6	6	6	6	6	6	6
	DEVRELEME / CIRCUIT	pcs	2	2	2	3	5	5	6
BOYUTLAR DIMENSION	GİRİŞ / INLET	mm	12	12	12	12	12	12	12
	ÇIKIŞ / OUTLET	mm	22	22	22	28	35	35	35
	A	mm	760	760	820	820	1000	1000	1080
	B	mm	470	470	550	550	630	630	710
	C	mm	300	350	300	350	350	400	400
	D	mm	345	395	345	395	395	445	445
	E	mm	400	400	460	460	640	640	720
	F	mm	180	180	180	180	180	180	180
AĞIRLIK WEIGHT	NET	kg	25	29	30	34	42	49	57
	GROSS	kg	35	41	43	49	60	70	83
ISITICI DEFROST WATT	BATARYA / BATTERY	D1							
	BATARYA / BATTERY	D2	4X500	4X500	4X500	4X500	5X600	5X600	5X700
	TAVA / TRAY		1X500	1X500	1X500	1X500	1X600	1X600	1X700

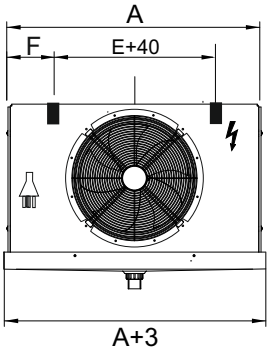

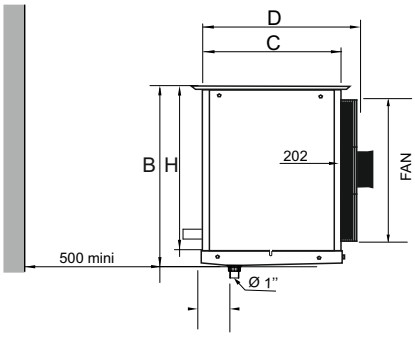

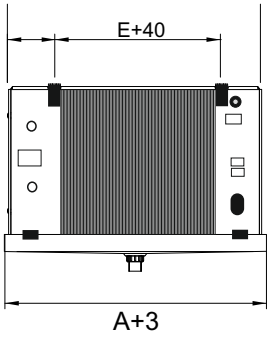

www.cancold.com.tr

CANCOLD®

CC 600 SERİSİ / SERIES

STANDART ODA SOĞUTUCULARI
STANDARD UNIT AIR COOLERS

İKİ FANLI / TWO FANS

CC Unit Coolers

1/2" Cooper Tube - Surface Corrugated Aluminium Fins.

Kalıp Geometrisi / Mould Geometry	40 x 35
Bakır Boru / Copper Tube	1/2"
Gövde / Body	STATİK BOYALI STATIC PAINTED

KOD/CODE			CC 607 P	CC 608 P	CC 609 P	CC 610 P	CC 611 P	CC 612 P	CC 613 P
MODEL			30.2.3X10	30.2.4X10	35.2.5X12	35.2.6X12	40.2.5X14	45.2.6X14	50.2.6X16
WATT	DT1=10K	SC1	4052	5850	9507	11436	15163	17467	25761
	DT1=8K	SC2	2609	3727	6296	7379	10182	11253	17656
FAN BİLGİLERİ FAN DATA	HAVA DEBİSİ/AIR FLOW RATE	m3/h	2740	2548	4187	3960	6450	6100	11897
	HAVA GÜCÜ/AIR PROJECTION	M	12	12	15	15	20	25	30
	FAN ADETİ VE ÇAPI / FAN NUMBER AND DIAMETER	mm	2X300	2X300	2X350	2X350	2X400	2X450	2X500
	TOPLAM GÜÇ / NO X POWER	W	1X75	1X75	1X140	1X140	1X180	1X250	1X450
	TOPLAM SES / TOTAL NOISE	db	72	72	64	64	73	73	72
	AMPER GÜCÜ / AMPERE POWER	A	0.33	0.33	0.6	0.6	0.39	0.6	0.9
	FAN DEVRİ / FAN SPEED	min	1390r	1390r	1400r	1400r	1380r	1380r	1300r
BATARYA BATTERY	YÜZEY ALANI / SURFACE AREA	m2	11,14	14,86	25,07	30,09	39,00	46,81	53,49
	BORU HACMİ / PIPE VOLUME	lt	2,7	3,6	6,1	7,3	9,5	11,4	13
	LAMEL ARALIĞI / FIN PITCH	mm	6	6	6	6	6	6	6
	DEVRELEME / CIRCUIT	pcs	3	2	2	4	7	7	8
BOYUTLAR DIMENSION	GİRİŞ / INLET	mm	12	12	12	12	12	16	16
	ÇIKIŞ / OUTLET	mm	28	19	19	28	35	35	42
	A	mm	1200	1200	1300	1300	1600	1600	1600
	B	mm	470	470	550	550	630	630	710
	C	mm	300	300	350	350	400	400	400
	D	mm	345	345	395	395	445	445	445
	E	mm	800	800	900	900	1200	1200	1200
	F	mm	200	200	200	200	200	200	200
AĞIRLIK WEIGHT	NET	kg	35	37	52	54	67	75	84
	GROSS	kg	50	51	68	70	74	96	109
ISITICI DEFROST WATT	BATARYA / BATTERY	D1	3X900	3X900	4X1000	4X1000	4X1200	4X1200	4X1400
	BATARYA / BATTERY	D2							
	TAVA / TRAY								

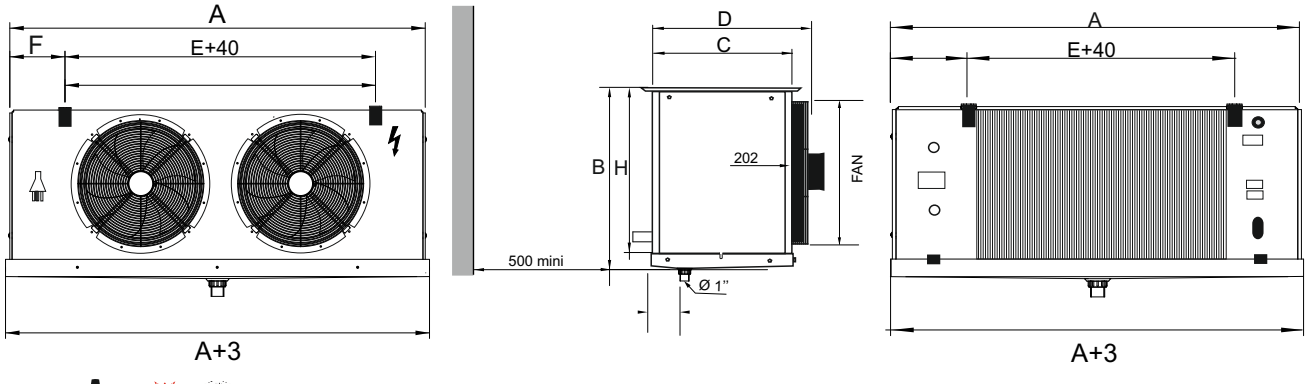

www.cancold.com.tr

CC 600 SERİSİ / SERIES

CANCOLD®

STANDART ODA SOĞUTUCULARI
STANDARD UNIT AIR COOLERS

İKİ FANLI / TWO FANS

CC Unit Coolers

1/2" Cooper Tube - Surface Corrugated Aluminium Fins.

Kalıp Geometrisi / Mould Geometry	40 x 35
Bakır Boru / Copper Tube	1/2"
Gövde / Body	STATİK BOYALI STATIC PAINTED

KOD/CODE			CC 607 N	CC 608 N	CC 609 N	CC 610 N	CC 611 N	CC 612 N	CC 613 N
MODEL			30.2.3X10	30.2.4X10	35.2.5X12	35.2.6X12	40.2.5X14	45.2.6X14	50.2.6X16
WATT	DT1=7K	SC3	1913	2631	4033	5122	7417	7980	12261
	DT1=6K	SC4	1474	2116	3545	4122	5794	6323	10010
FAN BİLGİLERİ FAN DATA	HAVA DEBİSİ/AIR FLOW RATE	m3/h	2740	2548	4187	3960	6450	6100	11897
	HAVA GÜCÜ/AIR PROJECTION	M	12	12	15	15	20	25	30
	FAN ADETİ VE ÇAPI / FAN NUMBER AND DIAMETER	mm	2X300	2X300	2X350	2X350	2X400	2X450	2X500
	TOPLAM GÜÇ / NO X POWER	W	1X75	1X75	1X140	1X140	1X180	1X250	1X450
	TOPLAM SES / TOTAL NOISE	db	72	72	64	64	73	73	72
	AMPER GÜCÜ / AMPERE POWER	A	0.33	0.33	0.6	0.6	0.39	0.6	0.9
	FAN DEVRİ / FAN SPEED	min	1390r	1390r	1400r	1400r	1380r	1380r	1300r
BATARYA BATTERY	YÜZEY ALANI / SURFACE AREA	m2	11,14	14,86	25,07	30,09	39,00	46,81	53,49
	BORU HACMİ / PIPE VOLUME	lt	2,7	3,6	6,1	7,3	9,5	11,4	13
	LAMEL ARALIĞI / FIN PITCH	mm	6	6	6	6	6	6	6
	DEVRELEME / CIRCUIT	pcs	2	2	2	4	5	6	7
BOYUTLAR DIMENSION	GİRİŞ / INLET	mm	12	12	12	12	12	16	16
	ÇIKIŞ / OUTLET	mm	22	22	19	28	35	35	42
	A	mm	1200	1200	1300	1300	1600	1600	1600
	B	mm	470	470	550	550	630	630	710
	C	mm	300	300	350	350	400	400	400
	D	mm	345	345	395	395	445	445	445
	E	mm	800	800	900	900	1200	1200	1200
	F	mm	200	200	200	200	200	200	200
AĞIRLIK WEIGHT	NET	kg	35	37	52	54	67	75	84
	GROSS	kg	50	51	68	70	74	96	109
ISITICI DEFROST WATT	BATARYA / BATTERY	D1							
	BATARYA / BATTERY	D2	4X900	4X900	5X1000	5X1000	5X1200	5X1200	5X1400
	TAVA / TRAY		1X900	1X900	1X1000	1X1000	1X1200	1X1200	1X1400

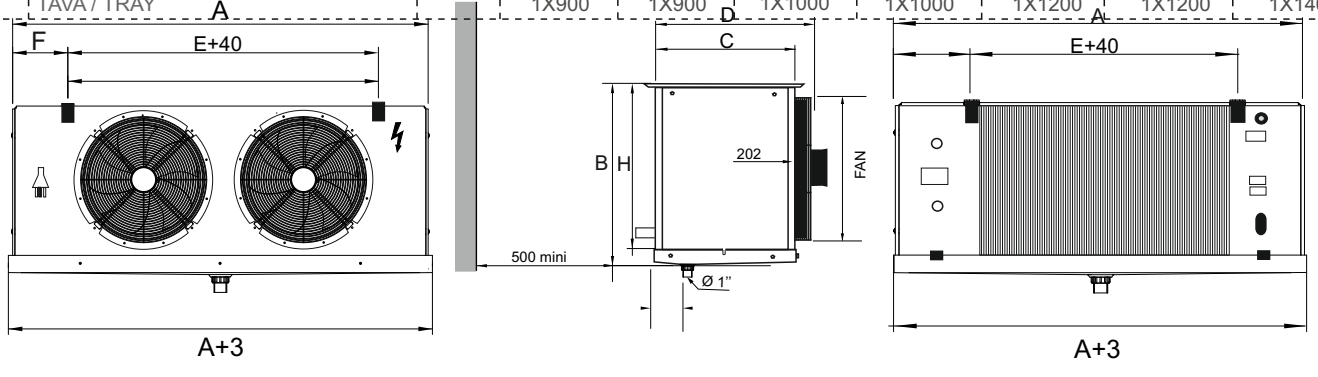

www.cancold.com.tr

CANCOLD®

CC 600 SERİSİ / SERIES

STANDART ODA SOĞUTUCULARI
STANDARD UNIT AIR COOLERS

ÜÇ FANLI / THREE FANS

CC Unit Coolers

1/2" Cooper Tube - Surface Corrugated Aluminium Fins.	
Kalıp Geometrisi / Mould Geometry	40 x 35
Bakır Boru / Copper Tube	1/2"
Gövde / Body	STATİK BOYALI STATIC PAINTED

KOD/CODE			CC 614 P	CC 615 P	CC 616 P	CC 617 P	CC 618 P	CC 619 P	CC 620 P
MODEL			30.3.4X10	30.3.6X10	35.3.4X12	35.3.6X12	40.3.4X14	45.3.6X14	50.3.6X16
WATT	DT1=10K	SC1	8309	10948	12505	17124	20014	25568	37102
	DT1=8K	SC2	5368	7217	8152	11071	12962	17194	25846
FAN BİLGİLERİ FAN DATA	HAVA DEBİSİ/AIR FLOW RATE	m3/h	3750	3267	6900	5940	9703	9150	17888
	HAVA GÜCÜ/AIR PROJECTION	M	12	12	15	15	20	25	30
	FAN ADETİ VE ÇAPI / FAN NUMBER AND DIAMETER	mm	3X300	3X300	3X350	3X350	3X400	3X450	3X500
	TOPLAM GÜÇ / NO X POWER	W	1X75	1X75	1X140	1X140	1X180	1X250	1X450
	TOPLAM SES / TOTAL NOISE	db	72	72	64	64	73	73	72
	AMPER GÜCÜ / AMPERE POWER	A	0.33	0.33	0.6	0.6	0.39	0.6	0.9
	FAN DEVRİ / FAN SPEED	min	1390r	1390r	1400r	1400r	1380r	1380r	1300r
BATARYA BATTERY	YÜZEY ALANI / SURFACE AREA	m2	22,29	33,43	29,87	44,80	46,81	70,21	80,24
	BORU HACMİ / PIPE VOLUME	lt	5,4	8,1	7,3	10,9	11,4	17,1	19,5
	LAMEL ARALIĞI / FIN PITCH	mm	6	6	6	6	6	6	6
	DEVRELEME / CIRCUIT	pcs	4	4	6	6	7	12	16
BOYUTLAR DIMENSION	GİRİŞ / INLET	mm	12	12	12	16	16	19	16
	ÇIKIŞ / OUTLET	mm	28	28	35	35	35	54	54
	A	mm	1600	1600	1740	1740	2200	2200	2200
	B	mm	470	470	550	550	630	630	710
	C	mm	300	350	350	350	350	400	400
	D	mm	345	395	395	395	395	445	445
	E	mm	1200	1200	1340	1340	1800	1800	1800
	F	mm	200	200	200	200	200	200	200
AĞIRLIK WEIGHT	NET	kg	55	63	67	75	84	105	115
	GROSS	kg	69	80	85	96	107	132	145
ISITICI DEFROST WATT	BATARYA / BATTERY	D1	4X1400	4X1400	4X1600	4X1600	4X1600	4X1600	4X1600
	BATARYA / BATTERY	D2							
	TAVA / TRAY								

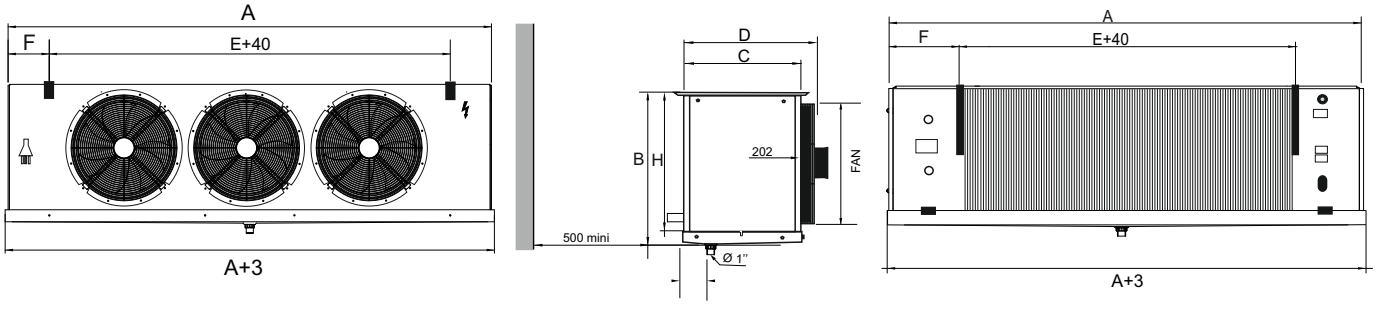

www.cancold.com.tr

CC 600 SERİSİ / SERIES

CANCOLD®

STANDART ODA SOĞUTUCULARI
STANDARD UNIT AIR COOLERS

ÜÇ FANLI / THREE FANS

CC Unit Coolers

1/2" Cooper Tube - Surface Corrugated Aluminium Fins.

Kalıp Geometrisi / Mould Geometry	40 x 35
Bakır Boru / Copper Tube	1/2"
Gövde / Body	STATİK BOYALI STATIC PAINTED

KOD/CODE			CC 614 N	CC 615 N	CC 616 N	CC 617 N	CC 618 N	CC 619 N	CC 620 N
MODEL			30.3.4X10	30.3.6X10	35.3.4X12	35.3.6X12	40.3.4X14	45.3.6X14	50.3.6X16
WATT	DT1=7K	SC3	3922	4881	6368	7807	8978	12306	18625
	DT1=6K	SC4	3254	3849	5310	6320	6948	10076	15813
FAN BİLGİLERİ FAN DATA	HAVA DEBİSİ/AIR FLOW RATE	m3/h	3750	3267	6900	5940	9703	9150	17888
	HAVA GÜCÜ/AIR PROJECTION	M	12	12	15	15	20	25	30
	FAN ADETİ VE ÇAPI / FAN NUMBER AND DIAMETER	mm	3X300	3X300	3X350	3X350	3X400	3X450	3X500
	TOPLAM GÜÇ / NO X POWER	W	1X75	1X75	1X140	1X140	1X180	1X250	1X450
	TOPLAM SES / TOTAL NOISE	db	72	72	64	64	73	73	72
	AMPER GÜCÜ / AMPERE POWER	A	0.33	0.33	0.6	0.6	0.39	0.6	0.9
	FAN DEVRİ / FAN SPEED	min	1390r	1390r	1400r	1400r	1380r	1380r	1300r
BATARYA BATTERY	YÜZEY ALANI / SURFACE AREA	m2	22,29	33,43	29,87	44,80	46,81	70,21	80,24
	BORU HACMİ / PIPE VOLUME	lt	5,4	8,1	7,3	10,9	11,4	17,1	19,5
	LAMEL ARALIĞI / FIN PITCH	mm	6	6	6	6	6	6	6
	DEVRELEME / CIRCUIT	pcs	3	4	4	6	7	12	16
BOYUTLAR DIMENSION	GİRİŞ / INLET	mm	12	12	12	16	16	19	16
	ÇIKIŞ / OUTLET	mm	28	28	28	35	42	54	54
	A	mm	1600	1600	1740	1740	2200	2200	2200
	B	mm	470	470	550	550	630	630	710
	C	mm	300	350	350	350	350	400	400
	D	mm	345	395	395	395	395	445	445
	E	mm	1200	1200	1340	1340	1800	1800	1800
	F	mm	200	200	200	200	200	200	200
AĞIRLIK WEIGHT	NET	kg	55	63	67	75	84	105	115
	GROSS	kg	69	80	85	96	107	132	145
ISITICI DEFROST WATT	BATARYA / BATTERY	D1	5X1400	5X1400	5X1600	5X1600	5X1600	5X1600	5X1600
	BATARYA / BATTERY	D2	1X1400	1X1400	1X1600	1X1600	1X1600	1X1600	1X1600
	TAVA / TRAY								

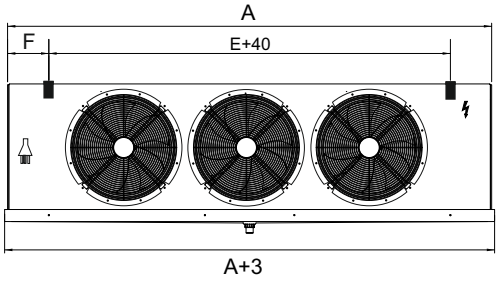

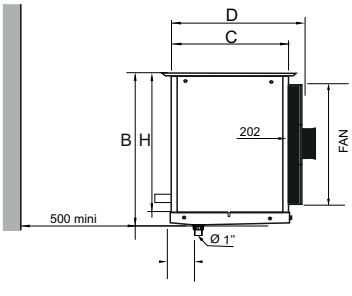

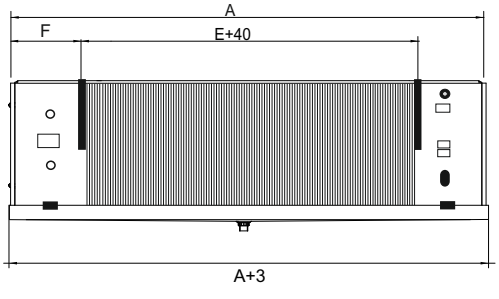

www.cancold.com.tr

CC 600 SERİSİ / SERIES

CANCOLD®

STANDART ODA SOĞUTUCULARI
STANDARD UNIT AIR COOLERS

DÖRT FANLI / FOUR FANS

CC Unit Coolers

1/2" Cooper Tube - Surface Corrugated Aluminium Fins.

Kalıp Geometrisi / Mould Geometry	40 x 35
Bakır Boru / Copper Tube	1/2"
Gövde / Body	STATİK BOYALI STATIC PAINTED

KOD/CODE			CC 621 N	CC 622 N	CC 623 N	CC 624 N	CC 625 N
MODEL			35.4.6X12	35.4.5X14	40.4.6X14	45.4.5X16	50.4.6X16
WATT	DT1=7K	SC3	10668	14052	15559	18550	25082
	DT1=6K	SC4	9122	11632	13062	15550	20749
FAN BİLGİLERİ FAN DATA	HAVA DEBİSİ/AIR FLOW RATE	m3/h	8038	12989	12436	18204	23795
	HAVA GÜCÜ/AIR PROJECTION	M	15	15	20	25	30
	FAN ADETİ VE ÇAPI / FAN NUMBER AND DIAMETER	mm	4X350	4X350	4X400	4X450	4X500
	TOPLAM GÜÇ / NO X POWER	W	1X140	1X140	1X180	1X250	1X450
	TOPLAM SES / TOTAL NOISE	db	64	64	73	73	72
	AMPER GÜCÜ / AMPERE POWER	A	0.6	0.6	0.39	0.6	0.9
	FAN DEVRİ / FAN SPEED	min	1400r	1400r	1380r	1380r	1300r
BATARYA BATTERY	YÜZEY ALANI / SURFACE AREA	m2	58,84	65,01	78,01	81,72	106,98
	BORU HACMİ / PIPE VOLUME	lt	14,3	15,8	19	19,9	26,1
	LAMEL ARALIĞI / FIN PITCH	mm	6	6	6	6	6
	DEVRELEME / CIRCUIT	pcs	9	11	12	13	16
BOYUTLAR DIMENSION	GİRİŞ / INLET	mm	19	22	22	22	22
	ÇIKIŞ / OUTLET	mm	42	54	54	54	54
	A	mm	2260	2500	2500	2700	2900
	B	mm	550	630	630	710	710
	C	mm	300	350	300	350	350
	D	mm	345	395	345	395	395
	E	mm	1760	2000	2000	2200	2400
	F	mm	250	250	250	250	250
AĞIRLIK WEIGHT	NET	kg	89	100	106	124	142
	GROSS	kg	113	126	134	155	177
ISITICI DEFROST WATT	BATARYA / BATTERY	D1					
	BATARYA / BATTERY	D2	5X1600	5X2500	5X2500	5X2500	5X2500
	TAVA / TRAY		1X1600	1X2500	1X2500	1X2500	1X2500

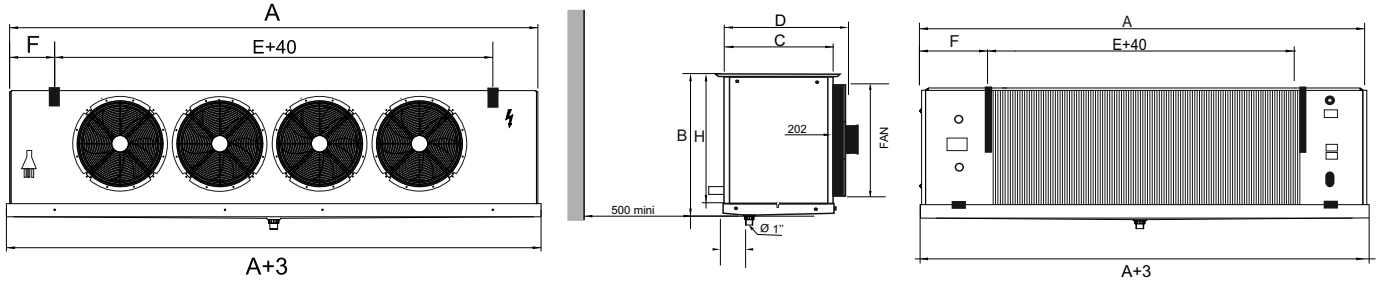

www.cancold.com.tr

CANCOLD®

CC 600 SERİSİ / SERIES

STANDART ODA SOĞUTUCULARI
STANDARD UNIT AIR COOLERS

DÖRT FANLI / FOUR FANS

CC Unit Coolers

1/2" Cooper Tube - Surface Corrugated Aluminium Fins.

Kalıp Geometrisi / Mould Geometry	40 x 35
Bakır Boru / Copper Tube	1/2"
Gövde / Body	STATİK BOYALI STATIC PAINTED

KOD/CODE			CC 621 P	CC 622 P	CC 623 P	CC 624 P	CC 625 P
MODEL			35.4.6X12	35.4.5X14	40.4.6X14	45.4.5X16	50.4.6X16
WATT	DT1=10K	SC1	22507	28125	32172	38082	50717
	DT1=8K	SC2	14248	19868	22147	26409	35225
FAN BİLGİLERİ FAN DATA	HAVA DEBİSİ/AIR FLOW RATE	m3/h	8038	12989	12436	18204	23795
	HAVA GÜCÜ/AIR PROJECTION	M	15	15	20	25	30
	FAN ADETİ VE ÇAPI / FAN NUMBER AND DIAMETER	mm	4X350	4X350	4X400	4X450	4X500
	TOPLAM GÜÇ / NO X POWER	W	1X140	1X140	1X180	1X250	1X450
	TOPLAM SES / TOTAL NOISE	A	64	64	73	73	72
	AMPER GÜCÜ / AMPERE POWER	db	0.6	0.6	0.39	0.6	0.9
	FAN DEVRİ / FAN SPEED	min	1400r	1400r	1380r	1380r	1300r
BATARYA BATTERY	YÜZEY ALANI / SURFACE AREA	m2	58,84	65,01	78,01	81,72	106,98
	BORU HACMİ / PIPE VOLUME	lt	14,3	15,8	19	19,9	26,1
	LAMEL ARALIĞI / FIN PITCH	mm	6	6	6	6	6
	DEVRELEME / CIRCUIT	pcs	9	11	12	13	16
BOYUTLAR DIMENSION	GİRİŞ / INLET	mm	19	22	22	22	22
	ÇIKIŞ / OUTLET	mm	42	54	54	54	54
	A	mm	2260	2500	2500	2700	2900
	B	mm	550	630	630	710	710
	C	mm	300	350	300	350	350
	D	mm	345	395	345	395	395
	E	mm	1760	2000	2000	2200	2400
	F	mm	250	250	250	250	250
AĞIRLIK WEIGHT	NET	kg	89	100	106	124	142
	GROSS	kg	113	126	134	155	177
ISITICI DEFROST WATT	BATARYA / BATTERY	D1	4X1600	4X2500	4X2500	4X2500	4X2500
	BATARYA / BATTERY	D2					
	TAVA / TRAY						

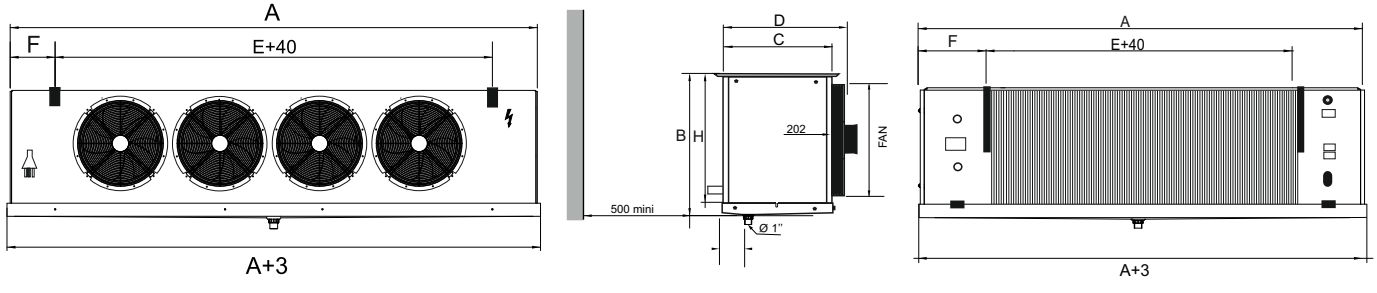

www.cancold.com.tr

CANCOLD®

CC 800 SERİSİ / SERIES

STANDART ODA SOĞUTUCULARI
STANDARD UNIT AIR COOLERS

TEK FANLI / ONE FANS

CC Unit Coolers

1/2" Cooper Tube - Surface Corrugated Aluminium Fins.

Kalıp Geometrisi / Mould Geometry	40 x 35
Bakır Boru / Copper Tube	1/2"
Gövde / Body	STATİK BOYALI STATIC PAINTED

KOD/CODE			CC 800 P	CC 801 P	CC 802 P	CC 803 P	CC 804 P	CC 805 P	CC 806 P	CC 807 P
MODEL			30.1.4X10	30.1.6X10	35.1.5X12	35.1.6X12	40.1.4X14	40.1.6X14	45.1.6X16	50.1.6X16
WATT	DT1=10K	SC1	1917	3041	4538	4717	4342	6683	9272	10597
	DT1=8K	SC2	1235	2106	3120	3081	2920	4536	6442	7641
FAN BİLGİLERİ FAN DATA	HAVA DEBİSİ/AIR FLOW RATE	m3/h	1300	1090	2213	2100	3278	3255	4528	6293
	HAVA GÜCÜ/AIR PROJECTION	M	12	12	15	15	20	20	25	30
	FAN ADETİ VE ÇAPI / FAN NUMBER AND DIAMETER	mm	1X300	1X300	1X350	1X350	1X400	1X400	1X450	1X500
	TOPLAM GÜÇ / NO X POWER	W	1X75	1X75	1X140	1X140	1X180	1X180	1X250	1X450
	TOPLAM SES / TOTAL NOISE	db	72	72	64	64	73	73	73	72
	AMPER GÜCÜ / AMPERE POWER	A	0.33	0.33	0.6	0.6	0.39	0.39	0.6	0.9
	FAN DEVRİ / FAN SPEED	min	1390r	1390r	1400r	1400r	1380r	1380r	1380r	1300r
BATARYA BATTERY	YÜZEY ALANI / SURFACE AREA	m2	5,73	8,60	9,89	11,86	12,84	19,26	22,01	24,76
	BORU HACMİ / PIPE VOLUME	lt	1,8	2,7	3,1	3,7	4,1	6,1	6,9	7,8
	LAMEL ARALIĞI / FIN PITCH	mm	8	8	8	8	8	8	8	8
	DEVRELEME / CIRCUIT	pcs	2	2	2	3	5	6	6	6
BOYUTLAR DIMENSION	GİRİŞ / INLET	mm	12	12	12	12	12	12	12	12
	ÇIKIŞ / OUTLET	mm	19	19	19	28	35	35	35	35
	A	mm	760	760	820	820	1000	1000	1000	1080
	B	mm	470	470	550	550	630	630	710	710
	C	mm	300	300	300	400	350	400	400	400
	D	mm	345	345	345	445	395	445	445	445
	E	mm	400	400	460	460	640	640	640	720
	F	mm	180	180	180	180	180	180	180	180
AĞIRLIK WEIGHT	NET	kg	24	27	31	35	39	46	53	57
	GROSS	kg	35	38	44	51	56	66	76	82
ISITICI DEFROST WATT	BATARYA / BATTERY	D1	3X500	3X500	3X500	3X500	4X600	4X600	4X700	4X900
	BATARYA / BATTERY	D2								
	TAVA / TRAY									

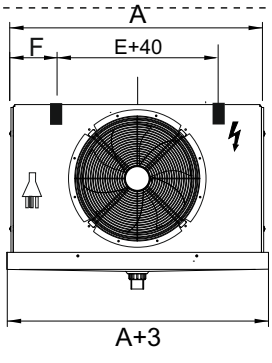

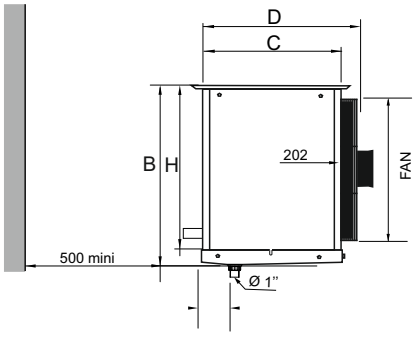

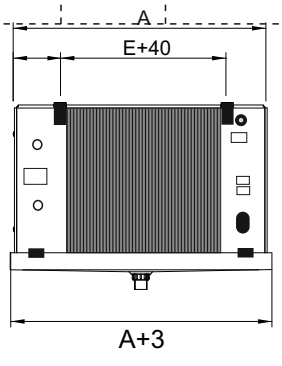

www.cancold.com.tr

CC 800 SERİSİ / SERIES

CANCOLD®

STANDART ODA SOĞUTUCULARI
STANDARD UNIT AIR COOLERS

TEK FANLI / ONE FANS

CC Unit Coolers

1/2" Cooper Tube - Surface Corrugated Aluminium Fins.

Kalıp Geometrisi / Mould Geometry	40 x 35
Bakır Boru / Copper Tube	1/2"
Gövde / Body	STATİK BOYALI STATIC PAINTED

KOD/CODE			CC 800 N	CC 801 N	CC 802 N	CC 803 N	CC 804 N	CC 805 N	CC 806 N	CC 807 N
MODEL			30.1.4X10	30.1.6X10	35.1.5X12	35.1.6X12	40.1.4X14	40.1.6X14	45.1.6X16	50.1.6X16
WATT	DT1=10K	SC3	968	1367	2167	2271	2126	3566	4931	6054
	DT1=8K	SC4	804	979	1778	1799	1457	2943	4076	4892
FAN BİLGİLERİ FAN DATA	HAVA DEBİSİ/AIR FLOW RATE	m3/h	1300	1090	2213	2100	3278	3255	4528	6293
	HAVA GÜCÜ/AIR PROJECTION	M	12	12	15	15	20	20	25	30
	FAN ADETİ VE ÇAPI / FAN NUMBER AND DIAMETER	mm	1X300	1X300	1X350	1X350	1X400	1X400	1X450	1X500
	TOPLAM GÜÇ / NO X POWER	W	1X75	1X75	1X140	1X140	1X180	1X180	1X250	1X450
	TOPLAM SES / TOTAL NOISE	db	72	72	64	64	73	73	73	72
	AMPER GÜCÜ / AMPERE POWER	A	0.33	0.33	0.6	0.6	0.39	0.39	0.6	0.9
	FAN DEVRİ / FAN SPEED	min	1390r	1390r	1400r	1400r	1380r	1380r	1380r	1300r
BATARYA BATTERY	YÜZEY ALANI / SURFACE AREA	m2	5,73	8,60	9,89	11,86	12,84	19,26	22,01	24,76
	BORU HACMİ / PIPE VOLUME	lt	1,8	2,7	3,1	3,7	4,1	6,1	6,9	7,8
	LAMEL ARALIĞI / FIN PITCH	mm	8	8	8	8	8	8	8	8
	DEVRELEME / CIRCUIT	pcs	2	2	2	3	5	5	5	6
BOYUTLAR DIMENSION	GİRİŞ / INLET	mm	12	12	12	12	12	12	12	12
	ÇIKIŞ / OUTLET	mm	22	22	22	28	35	35	35	35
	A	mm	760	760	820	820	1000	1000	1000	1080
	B	mm	470	470	550	550	630	630	710	710
	C	mm	300	300	300	400	350	400	400	400
	D	mm	345	345	345	445	395	445	445	445
	E	mm	400	400	460	460	640	640	640	720
	F	mm	180	180	180	180	180	180	180	180
AĞIRLIK WEIGHT	NET	kg	24	27	31	35	39	46	53	57
	GROSS	kg	35	38	44	51	56	66	76	82
ISITICI DEFROST WATT	BATARYA / BATTERY	D1	4X500	4X500	4X500	4X500	5X600	5X600	5X700	5X900
	BATARYA / BATTERY	D2	1X500	1X500	1X500	1X500	1X600	1X600	1X700	1X900
	TAVA / TRAY									

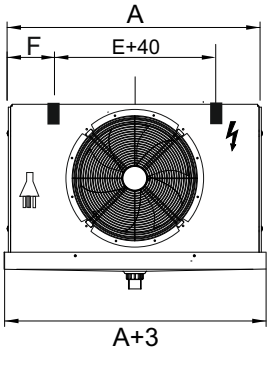

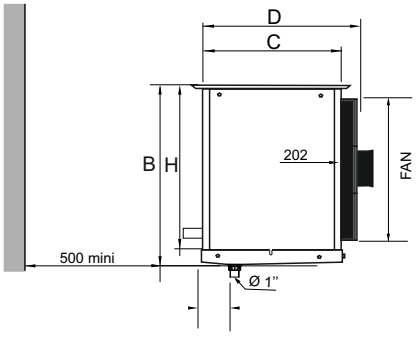

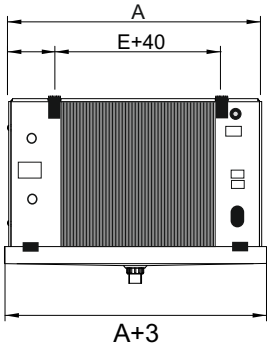

www.cancold.com.tr

CANCOLD®

CC 800 SERİSİ / SERIES

STANDART ODA SOĞUTUCULARI
STANDARD UNIT AIR COOLERS

İKİ FANLI / TWO FANS

CC Unit Coolers

1/2" Cooper Tube - Surface Corrugated Aluminium Fins.

Kalıp Geometrisi / Mould Geometry	40 x 35
Bakır Boru / Copper Tube	1/2"
Gövde / Body	STATİK BOYALI STATIC PAINTED

KOD/CODE			CC 808 P	CC 809 P	CC 810 P	CC 811 P	CC 812 P	CC 813 P	CC 814 P	CC 815 P
MODEL			30.2.4X10	30.2.6X10	35.2.5X12	35.2.6X12	40.2.4X14	40.2.5X14	45.2.6X14	50.2.6X16
WATT	DT1=10K	SC1	5022	6405	8421	10204	10263	13224	15505	22672
	DT1=8K	SC2	3333	4432	5858	6497	7208	8808	10181	15597
FAN BİLGİLERİ FAN DATA	HAVA DEBİSİ/AIR FLOW RATE	m3/h	2600	2218	3900	4200	6345	6700	6400	12554
	HAVA GÜCÜ/AIR PROJECTION	M	12	12	15	15	20	20	25	30
	FAN ADETİ VE ÇAPI / FAN NUMBER AND DIAMETER	mm	2X300	2X300	2X350	2X350	2X400	2X400	2X450	2X500
	TOPLAM GÜÇ / NO X POWER	W	1X75	1X75	1X140	1X140	1X180	1X180	1X250	1X450
	TOPLAM SES / TOTAL NOISE	db	72	72	64	64	73	73	73	72
	AMPER GÜCÜ / AMPERE POWER	A	0.33	0.33	0.6	0.6	0.39	0.39	0.6	0.9
	FAN DEVRİ / FAN SPEED	min	1390r	1390r	1400r	1400r	1380r	1380r	1380r	1300r
BATARYA BATTERY	YÜZEY ALANI / SURFACE AREA	m2	11,46	17,19	19,34	23,21	24,07	30,09	36,11	41,27
	BORU HACMİ / PIPE VOLUME	lt	3,6	5,4	6,1	7,3	7,6	9,5	11,4	13,0
	LAMEL ARALIĞI / FIN PITCH	mm	8	8	8	8	8	8	8	8
	DEVRELEME / CIRCUIT	pcs	2	3	4	4	7	7	7	8
BOYUTLAR DIMENSION	GİRİŞ / INLET	mm	12	12	12	12	12	12	16	16
	ÇIKIŞ / OUTLET	mm	19	28	28	28	35	35	35	42
	A	mm	1200	1200	1300	1300	1600	1600	1600	1600
	B	mm	470	470	550	550	630	630	630	710
	C	mm	300	350	300	350	350	350	400	400
	D	mm	345	395	345	395	395	395	445	445
	E	mm	800	800	900	900	1200	1200	1200	1200
	F	mm	200	200	200	200	200	200	200	200
AĞIRLIK WEIGHT	NET	kg	38	44	49	54	62	67	79	86
	GROSS	kg	54	63	70	78	89	96	114	124
ISITICI DEFROST WATT	BATARYA / BATTERY	D1	3X900	4X1000	4X1000	4X1200	4X1200	4X1400	4X1400	4X1400
	BATARYA / BATTERY	D2								
	TAVA / TRAY									

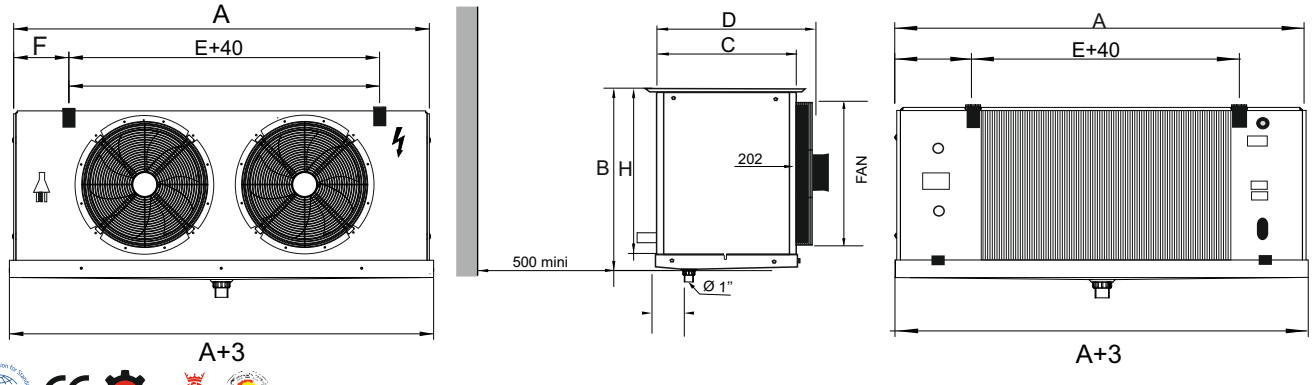

www.cancold.com.tr

CC 800 SERİSİ / SERIES

CANCOLD®

STANDART ODA SOĞUTUCULARI
STANDARD UNIT AIR COOLERS

İKİ FANLI / TWO FANS

CC Unit Coolers

1/2" Cooper Tube - Surface Corrugated Aluminium Fins.

Kalıp Geometrisi / Mould Geometry	40 x 35
Bakır Boru / Copper Tube	1/2"
Gövde / Body	STATİK BOYALI STATIC PAINTED

KOD/CODE			CC 808 N	CC 809 N	CC 810 N	CC 811 N	CC 812 N	CC 813 N	CC 814 N	CC 815 N
MODEL			30.2.4X10	30.2.6X10	35.2.5X12	35.2.6X12	40.2.4X14	40.2.5X14	45.2.6X14	50.2.6X16
WATT	DT1=10K	SC3	2271	2971	4073	4613	4851	6535	7447	11029
	DT1=8K	SC4	1818	2224	2873	3736	3339	5325	6176	9248
FAN BİLGİLERİ FAN DATA	HAVA DEBİSİ/AIR FLOW RATE	m3/h	2600	2218	3900	4200	6345	6700	6400	12554
	HAVA GÜCÜ/AIR PROJECTION	M	12	12	15	15	20	20	25	30
	FAN ADETİ VE ÇAPI / FAN NUMBER AND DIAMETER	mm	2X300	2X300	2X350	2X350	2X400	2X400	2X450	2X500
	TOPLAM GÜÇ / NO X POWER	W	1X75	1X75	1X140	1X140	1X180	1X180	1X250	1X450
	TOPLAM SES / TOTAL NOISE	db	72	72	64	64	73	73	73	72
	AMPER GÜCÜ / AMPERE POWER	A	0.33	0.33	0.6	0.6	0.39	0.39	0.6	0.9
	FAN DEVRİ / FAN SPEED	min	1390r	1390r	1400r	1400r	1380r	1380r	1380r	1300r
BATARYA BATTERY	YÜZEY ALANI / SURFACE AREA	m2	11,46	17,19	19,34	23,21	24,07	30,09	36,11	41,27
	BORU HACMİ / PIPE VOLUME	lt	3,6	5,4	6,1	7,3	7,6	9,5	11,4	13,0
	LAMEL ARALIĞI / FIN PITCH	mm	8	8	8	8	8	8	8	8
	DEVRELEME / CIRCUIT	pcs	2	3	4	4	7	7	6	8
BOYUTLAR DIMENSION	GİRİŞ / INLET	mm	12	12	12	12	12	12	16	16
	ÇIKIŞ / OUTLET	mm	22	28	28	28	42	42	35	42
	A	mm	1200	1200	1300	1300	1600	1600	1600	1600
	B	mm	470	470	550	550	630	630	630	710
	C	mm	300	350	300	350	350	350	400	400
	D	mm	345	395	345	395	395	395	445	445
	E	mm	800	800	900	900	1200	1200	1200	1200
	F	mm	200	200	200	200	200	200	200	200
AĞIRLIK WEIGHT	NET	kg	38	44	49	54	62	67	79	86
	GROSS	kg	54	63	70	78	89	96	114	124
ISITICI DEFROST WATT	BATARYA / BATTERY	D1								
	BATARYA / BATTERY	D2	4X900	5X1000	5X1000	5X1200	5X1200	5X1400	5X1400	5X1400
	TAVA / TRAY		1X900	1X1000	1X1000	1X1200	1X1200	1X1400	1X1400	1X1400

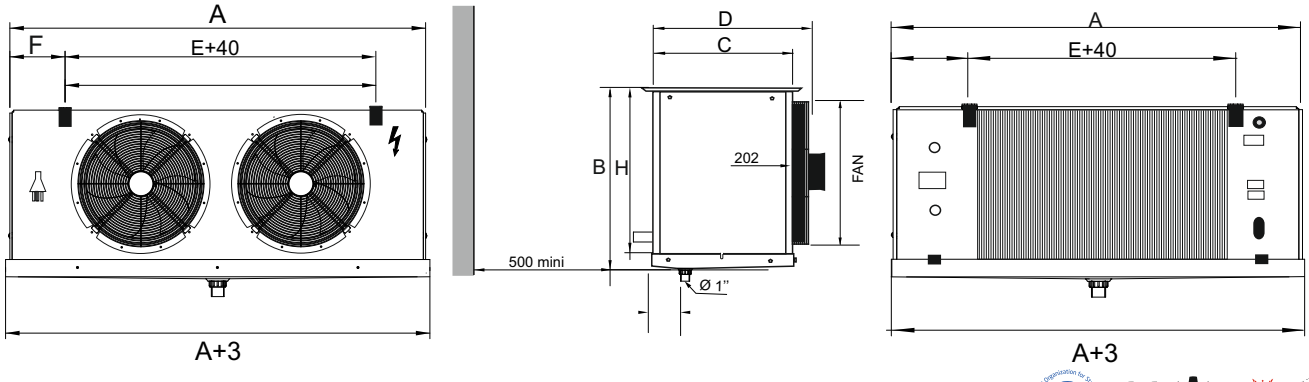

www.cancold.com.tr

CANCOLD®

CC 800 SERİSİ / SERIES

STANDART ODA SOĞUTUCULARI
STANDARD UNIT AIR COOLERS

ÜÇ FANLI / THREE FANS

CC Unit Coolers

1/2" Cooper Tube - Surface Corrugated Aluminium Fins.

Kalıp Geometrisi / Mould Geometry	40 x 35
Bakır Boru / Copper Tube	1/2"
Gövde / Body	STATİK BOYALI STATIC PAINTED

KOD/CODE			CC 816 P	CC 817 P	CC 818 P	GC 819 P	CC 820 P	CC 821 P	CC 822 P	GC 823 P
MODEL			30.3.4X10	30.3.6X10	35.3.5X12	35.3.6X12	40.3.4X14	40.3.5X14	45.3.6X14	50.3.6X16
WATT	DT1=10K	SC1	7189	9727	12985	15471	16751	21325	25107	34107
	DT1=8K	SC2	4873	6603	9040	9863	11234	13390	16863	23644
FAN BİLGİLERİ FAN DATA	HAVA DEBİSİ/AIR FLOW RATE	m3/h	3900	3327	5850	6300	9385	10050	10960	18816
	HAVA GÜCÜ/AIR PROJECTION	M	12	12	15	15	20	20	25	30
	FAN ADETİ VE ÇAPI / FAN NUMBER AND DIAMETER	mm	3X300	3X300	3X350	3X350	3X400	3X400	3X450	3X500
	TOPLAM GÜÇ / NO X POWER	W	1X75	1X75	1X140	1X140	1X180	1X180	1X250	1X450
	TOPLAM SES / TOTAL NOISE	db	72	72	64	64	73	73	73	72
	AMPER GÜCÜ / AMPERE POWER	A	0.33	0.33	0.6	0.6	0.39	0.39	0.6	0.9
	FAN DEVRİ / FAN SPEED	min	1390r	1390r	1400r	1400r	1380r	1380r	1380r	1300r
BATARYA BATTERY	YÜZEY ALANI / SURFACE AREA	m2	17,19	25,79	29,23	35,08	36,11	45,14	54,16	61,90
	BORU HACMİ / PIPE VOLUME	lt	5,4	8,1	9,2	11,1	11,4	14,3	17,1	19,5
	LAMEL ARALIĞI / FIN PITCH	mm	8	8	8	8	8	8	8	8
	DEVRELEME / CIRCUIT	pcs	4	3	5	6	7	7	10	12
BOYUTLAR DIMENSION	GİRİŞ / INLET	mm	12	12	12	16	16	16	16	19
	ÇIKIŞ / OUTLET	mm	28	28	35	35	35	35	42	54
	A	mm	1600	1600	1760	1760	2200	2200	2200	2200
	B	mm	470	470	550	550	630	630	630	710
	C	mm	300	350	300	400	350	350	400	400
	D	mm	345	395	345	445	395	395	445	445
	E	mm	1200	1200	1360	1360	1800	1800	1800	1800
	F	mm	200	200	200	200	200	200	200	200
AĞIRLIK WEIGHT	NET	kg	51	60	67	77	85	92	110	122
	GROSS	kg	73	86	97	110	123	133	158	175
ISITICI DEFROST WATT	BATARYA / BATTERY	D1	4X1600	4X1600	4X1600	4X1600	4X1600	4X1600	4X2500	4X2500
	BATARYA / BATTERY	D2								
	TAVA / TRAY									

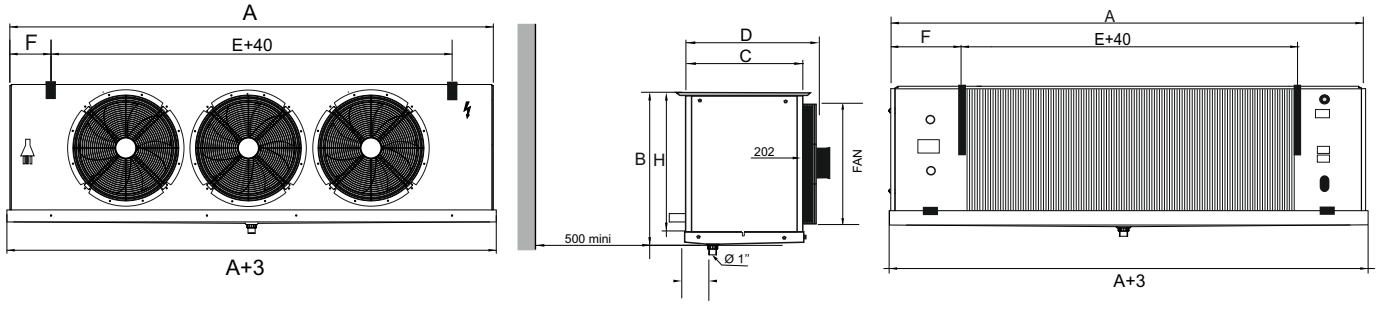

www.cancold.com.tr

CC 800 SERİSİ / SERIES

CANCOLD®

STANDART ODA SOĞUTUCULARI
STANDARD UNIT AIR COOLERS

ÜÇ FANLI / THREE FANS

CC Unit Coolers

1/2" Cooper Tube - Surface Corrugated Aluminium Fins.

Kalıp Geometrisi / Mould Geometry	40 x 35
Bakır Boru / Copper Tube	1/2"
Gövde / Body	STATİK BOYALI STATIC PAINTED

KOD/CODE			CC 816 N	CC 817 N	CC 818 N	CC 819 N	CC 820 N	CC 821 N	CC 822 N	CC 823 N
MODEL			30.3.4X10	30.3.6X10	35.3.5X12	35.3.6X12	40.3.4X14	40.3.5X14	45.3.6X14	50.3.6X16
WATT	DT1=10K	SC3	3351	4323	6098	7032	7673	9688	10850	16732
	DT1=8K	SC4	2463	3514	4794	5706	6114	7765	9496	13957
FAN BİLGİLERİ FAN DATA	HAVA DEBİSİ/AIR FLOW RATE	m3/h	3900	3327	5850	6300	9385	10050	10960	18816
	HAVA GÜCÜ/AIR PROJECTION	M	12	12	15	15	20	20	25	30
	FAN ADETİ VE ÇAPI / FAN NUMBER AND DIAMETER	mm	3X300	3X300	3X350	3X350	3X400	3X400	3X450	3X500
	TOPLAM GÜÇ / NO X POWER	W	1X75	1X75	1X140	1X140	1X180	1X180	1X250	1X450
	TOPLAM SES / TOTAL NOISE	db	72	72	64	64	73	73	73	72
	AMPER GÜCÜ / AMPERE POWER	A	0.33	0.33	0.6	0.6	0.39	0.39	0.6	0.9
	FAN DEVRİ / FAN SPEED	min	1390r	1390r	1400r	1400r	1380r	1380r	1380r	1300r
BATARYA BATTERY	YÜZEY ALANI / SURFACE AREA	m2	17,19	25,79	29,23	35,08	36,11	45,14	54,16	61,90
	BORU HACMİ / PIPE VOLUME	lt	5,4	8,1	9,2	11,1	11,4	14,3	17,1	19,5
	LAMEL ARALIĞI / FIN PITCH	mm	8	8	8	8	8	8	8	8
	DEVRELEME / CIRCUIT	pcs	4	3	5	6	7	7	10	12
BOYUTLAR DIMENSION	GİRİŞ / INLET	mm	12	12	12	16	16	16	16	19
	ÇIKIŞ / OUTLET	mm	35	28	35	35	42	42	54	54
	A	mm	1600	1600	1760	1760	2200	2200	2200	2200
	B	mm	470	470	550	550	630	630	630	710
	C	mm	300	350	300	400	350	350	400	400
	D	mm	345	395	345	445	395	395	445	445
	E	mm	1200	1200	1360	1360	1800	1800	1800	1800
	F	mm	200	200	200	200	200	200	200	200
AĞIRLIK WEIGHT	NET	kg	51	60	67	77	85	92	110	122
	GROSS	kg	73	86	97	110	123	133	158	175
ISITICI DEFROST WATT	BATARYA / BATTERY	D1								
	BATARYA / BATTERY	D2	5X1600	5X1600	5X1600	5X1600	5X1600	5X1600	5X2500	5X2500
	TAVA / TRAY		1X1600	1X1600	1X1600	1X1600	1X1600	1X1600	1X2500	1X2500

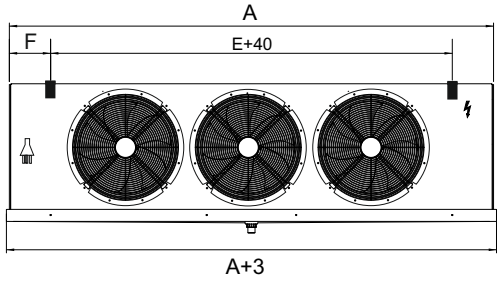

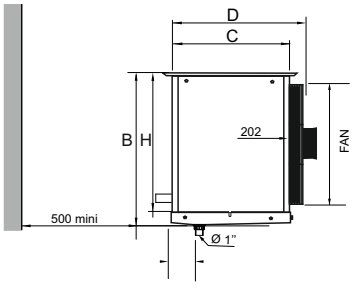

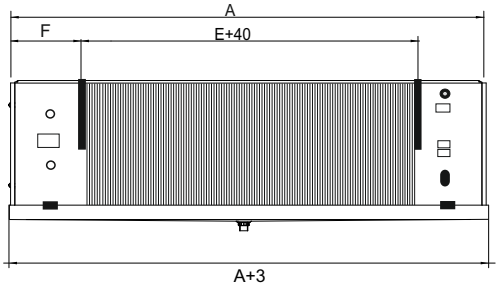

www.cancold.com.tr

CANCOLD®

CC 800 SERİSİ / SERIES

STANDART ODA SOĞUTUCULARI
STANDARD UNIT AIR COOLERS

DÖRT FANLI / FOUR FANS

CC Unit Coolers

1/2" Cooper Tube - Surface Corrugated Aluminium Fins.

Kalıp Geometrisi / Mould Geometry	40 x 35
Bakır Boru / Copper Tube	1/2"
Gövde / Body	STATİK BOYALI STATIC PAINTED

KOD/CODE			CC 824 N	CC 825 N	CC 826 N	CC 827 N	CC 828 N	CC 829 N
MODEL			35.4.4X12	40.4.5X14	45.4.5X14	40.4.6X14	45.4.6X14	50.4.6X16
WATT	DT1=10K	SC3	7525	12288	11978	13237	12617	20501
	DT1=8K	SC4	6104	10280	9218	10767	9797	15629
FAN BİLGİLERİ / FAN DATA	HAVA DEBİSİ/AIR FLOW RATE	m3/h	9724	13429	15282	13250	14260	25088
	HAVA GÜCÜ/AIR PROJECTION	M	15	20	25	20	25	30
	FAN ADETİ VE ÇAPI / FAN NUMBER AND DIAMETER	mm	4X350	4X400	4X450	4X400	4X450	4X500
	TOPLAM GÜÇ / NO X POWER	W	1X140	1X180	1X250	1X180	1X250	1X450
	TOPLAM SES / TOTAL NOISE	db	64	73	73	73	73	72
	AMPER GÜCÜ / AMPERE POWER	A	0.6	0.39	0.6	0.39	0.6	0.9
	FAN DEVRİ / FAN SPEED	min	1400r	1380r	1380r	1380r	1380r	1300r
BATARYA / BATTERY	YÜZEY ALANI / SURFACE AREA	m2	30,26	50,15	55,17	60,18	66,20	82,54
	BORU HACMİ / PIPE VOLUME	lt	9,6	15,8	17,4	19	20,9	26,1
	LAMEL ARALIĞI / FIN PITCH	mm	8	8	8	8	8	8
	DEVRELEME / CIRCUIT	pcs	6	10	11	14	14	16
BOYUTLAR / DIMENSION	GİRİŞ / INLET	mm	16	16	16	16	22	22
	ÇIKIŞ / OUTLET	mm	35	42	54	54	54	64
	A	mm	2260	2500	2700	2500	2700	2900
	B	mm	550	630	630	630	630	710
	C	mm	300	350	350	350	400	400
	D	mm	345	395	395	395	445	445
	E	mm	1760	2000	2200	2000	2200	2400
	F	mm	250	250	250	250	250	250
AĞIRLIK / WEIGHT	NET	kg	79	107	123	114	135	158
	GROSS	kg	114	154	178	164	195	228
ISITICI / DEFROST WATT	BATARYA / BATTERY	D1						
	BATARYA / BATTERY	D2	5X2500	5X2500	5X2500	5X2500	5X3000	5X3000
	TAVA / TRAY		1X2500	1X2500	1X2500	1X2500	1X3000	1X3000

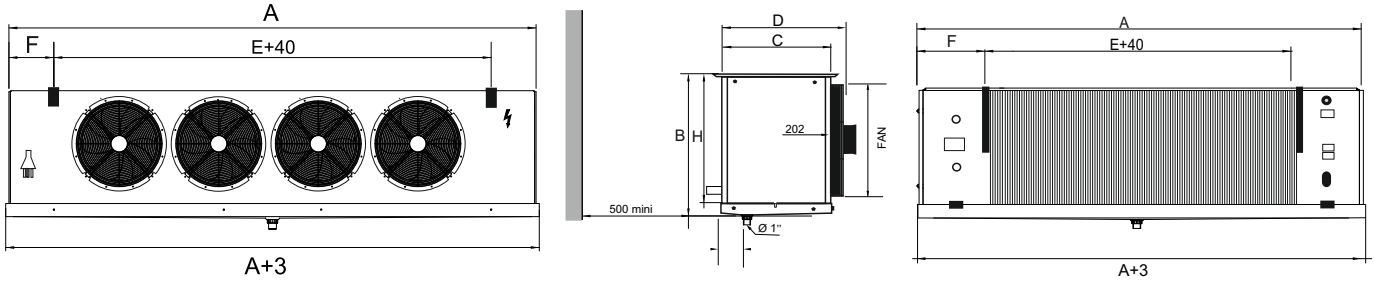

www.cancold.com.tr

CC 800 SERİSİ / SERIES

CANCOLD®

STANDART ODA SOĞUTUCULARI
STANDARD UNIT AIR COOLERS

DÖRT FANLI / FOUR FANS

CC Unit Coolers

1/2" Cooper Tube - Surface Corrugated Aluminium Fins.

Kalıp Geometrisi / Mould Geometry	40 x 35
Bakır Boru / Copper Tube	1/2"
Gövde / Body	STATİK BOYALI STATIC PAINTED

KOD/CODE			CC 824 P	CC 825 P	CC 826 P	CC 827 P	CC 828 P	CC 829 P
MODEL			35.4.4X12	40.4.5X14	45.4.5X14	40.4.6X14	45.4.6X14	50.4.6X16
WATT	DT1=10K	SC1	15324	24928	27830	28263	30657	45432
	DT1=8K	SC2	9837	17479	18629	18226	20585	30473
FAN BİLGİLERİ FAN DATA	HAVA DEBİSİ/AIR FLOW RATE	m3/h	9724	13429	15282	13250	14260	25088
	HAVA GÜCÜ/AIR PROJECTION	M	15	20	25	20	25	30
	FAN ADETİ VE ÇAPI / FAN NUMBER AND DIAMETER	mm	4X350	4X400	4X450	4X400	4X450	4X500
	TOPLAM GÜÇ / NO X POWER	W	1X140	1X180	1X250	1X180	1X250	1X450
	TOPLAM SES / TOTAL NOISE	db	64	73	73	73	73	72
	AMPER GÜCÜ / AMPERE POWER	A	0.6	0.39	0.6	0.39	0.6	0.9
	FAN DEVRİ / FAN SPEED	min	1400r	1380r	1380r	1380r	1380r	1300r
BATARYA BATTERY	YÜZEY ALANI / SURFACE AREA	m2	30,26	50,15	55,17	60,18	66,20	82,54
	BORU HACMİ / PIPE VOLUME	lt	9,6	15,8	17,4	19	20,9	26,1
	LAMEL ARALIĞI / FIN PITCH	mm	8	8	8	8	8	8
	DEVRELEME / CIRCUIT	pcs	6	10	11	14	14	16
BOYUTLAR DIMENSION	GİRİŞ / INLET	mm	16	16	16	16	22	22
	ÇIKIŞ / OUTLET	mm	35	42	54	54	54	54
	A	mm	2260	2500	2700	2500	2700	2900
	B	mm	550	630	630	630	630	710
	C	mm	300	350	350	350	400	400
	D	mm	345	395	395	395	445	445
	E	mm	1760	2000	2200	2000	2200	2400
	F	mm	250	250	250	250	250	250
AĞIRLIK WEIGHT	NET	kg	79	107	123	114	135	158
	GROSS	kg	114	154	178	164	195	228
ISITICI DEFROST WATT	BATARYA / BATTERY	D1	4X2500	4X2500	4X2500	4X2500	4X3000	4X3000
	BATARYA / BATTERY	D2						
	TAVA / TRAY							

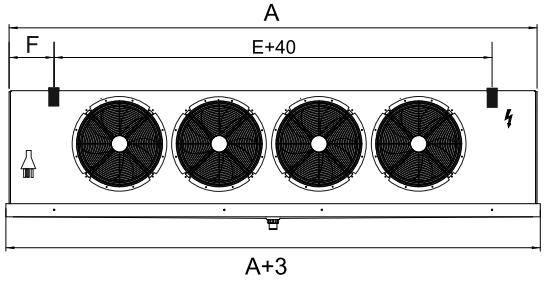

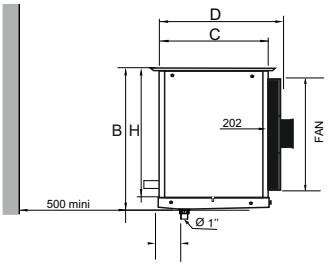

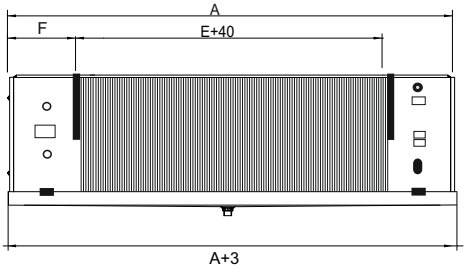

www.cancold.com.tr